MH4803A is a low-power, wide linear range, wide voltage, and wide temperature range linear Hall sensor specifically optimized for unipolar applications of magnetic axis keyboard. The zero-point output voltage (V_{DD} = 3.3V, no magnetic field) is set at 2.18V. Its output voltage changes proportionally with the intensity of the sensed magnetic field, and its linear output voltage range varies with the power supply voltage.The linear Hall sensor has a wide operating temperature range of -40℃ to +85℃, appropriate for commercial, consumer, and industrial environments.

The high sensitivity of Hall-effect sensor accurately tracks extremely weak changes in magnetic flux density. The linear output voltage is set by the supply voltage and is proportional to the variation of the magnetic flux density. Operating voltage range is 3.0 volts to 6.0 V.

Features and Benefits

- Optimized for unipolar applications of magnetic axis keyboard
- Operating Voltage Range: 3.0V~6.0V
- Lower I_{DD} in 0.65mA
- Low-Noise Operation
- Linear output for circuit design flexibility
- Robust ESD performance
- RoHS compliant 2011/65/EU and Halogen Free

Applications

- Magnetic axis keyboard
- Current sensing
- Motor control
- Position sensing
- Magnetic code reading
- Rotary encoder
- Ferrous metal detector
- Vibration sensing
- Liquid level sensing
- Weight sensing

Ordering Information

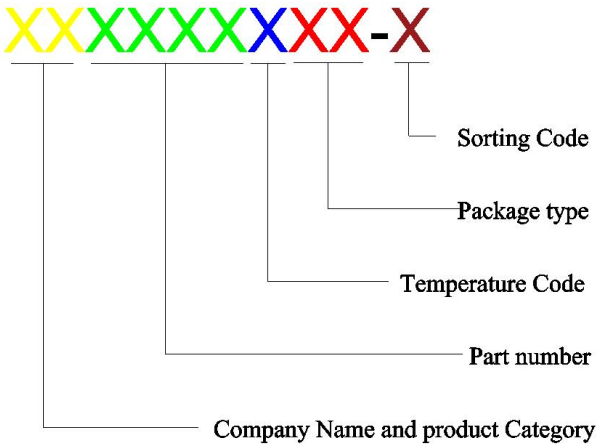

Company Name and Product Category

MH:MST Hall Effect/MP:MST Power IC

Part number

181,182,183,184,185,248,249,276,477,381,381F,381R,382…..

If part # is just 3 digits, the fourth digit will be omitted.

Temperature range

E: 85 ℃, I: 105 ℃, K: 125 ℃, L: 150 ℃

Package type

UA:TO-92S,VK:TO-92S(4pin),VF:TO-92S(5pin),SO:SOT-23,

SQ:QFN-3,ST:TSOT-23,SN:SOT-553,SF:SOT-89(5pin),

SS:TSOT-26,SD:DFN-6

Sorting

α , β ,Blank…..

Part No.	Temperature Suffix	Package Type
MH4803AESR	E (-40℃ to + 85℃)	SR (SOT23-6L Flat Lead）

Functional Diagram

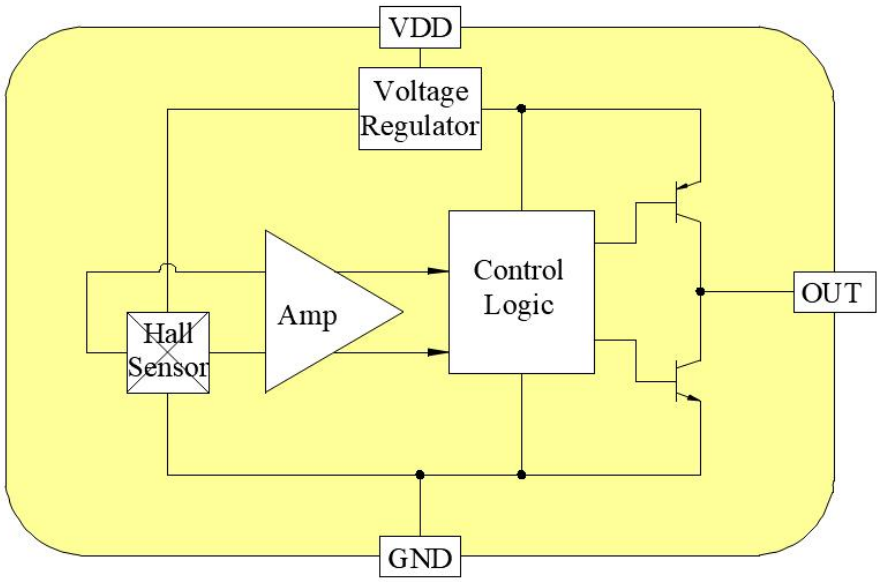

Absolute Maximum Ratings *At(T_A=25℃)*

Characteristics		Values	Unit
Supply Voltage,(V_{DD})		7	V
Reverse Voltage , (V_{DD})		-0.3	V
Magnetic Flux Density		Unlimited	Gauss
Output Current , (I_{OUT})		10	mA
Operating Temperature Range, (T_A)	"E" version	-40 to +85	℃
Storage temperature range, (Ts)		-65 to +165	℃
Maximum Junction Temp,(Tj)		165	℃
Thermal Resistance	(θja)	543	℃/W
	(θjc)	48	℃/W
Package Power Dissipation, (PD)		606	mW

***Note**: Do not apply reverse voltage to V_{DD} and V_{OUT} Pin, It may be caused for malfunction or damaged device.*

Electrical Specifications

DC Operating Parameters： T_A=25℃, V_{DD}=3.3V

Parameters	Test Conditions	Min	Typ	Max	Units
Supply Voltage,(V_{DD})	Operating	3.0	3.3	6.0	V
Supply Current,(I_{DD})	B=0 Gauss		0.65	0.85	mA
Output Current ,(I_{OUT})			10		mA
Null Output Voltage, (V_{Null})	B=0 Gauss		2.18		V
Output Voltage, (V_{O1})	B=100 Gauss		2.02		V
Output Voltage Span, (Vos)		0.2		2.6	V
Linearity	% of Span	-1		1	%
Response Time			2.5		uS
Sensitivity		1.5	1.6	1.7	mV/Gs
Magnetic Sensing Range, (B)			1200		Gs
Electro-Static Discharge	HBM		6		kV

Typical Application Circuit

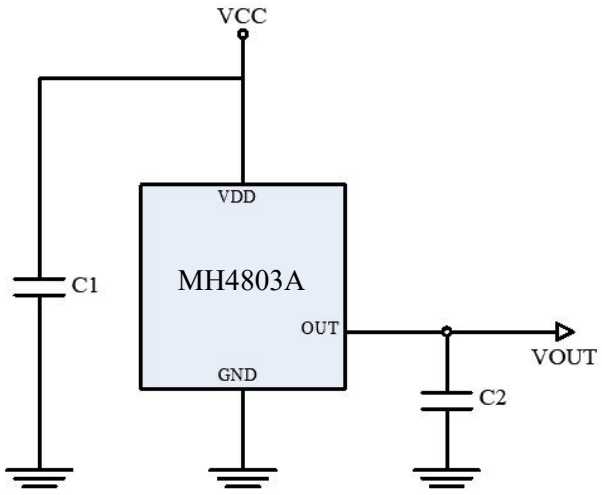

C1：1000pF
C2：10pF

Output Behavior versus Magnetic Polarity

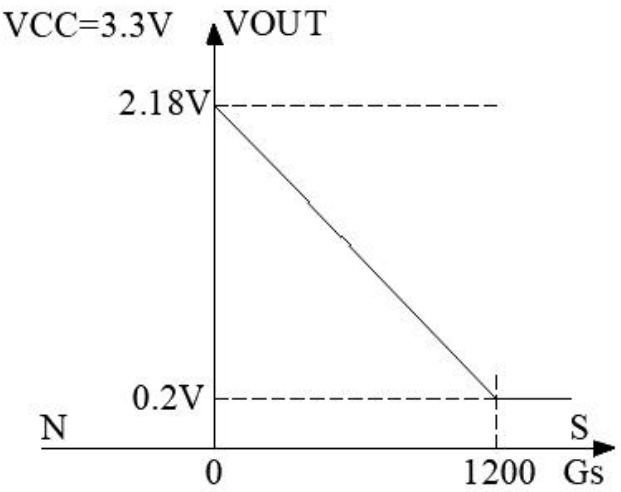

PS:The magnet is facing the marking side of the IC.

Sensor Location, Package Dimension and Marking

SR Package (SOT23-6L Flat Lead)

(Top View)

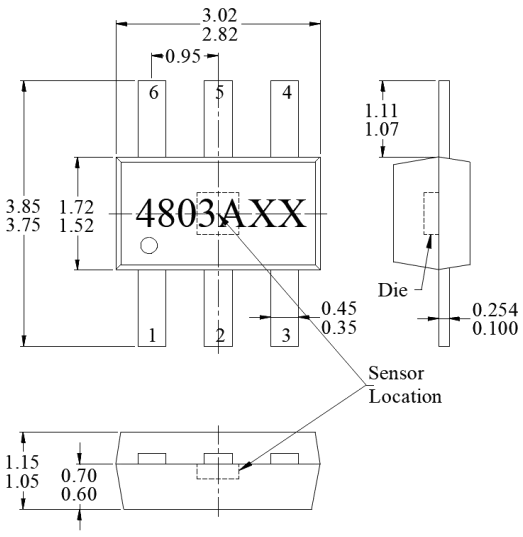

Hall Plate Chip Location

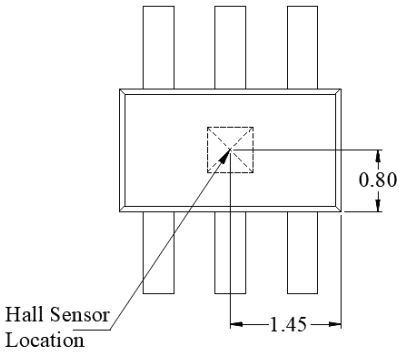

(For reference only)Land Pattern

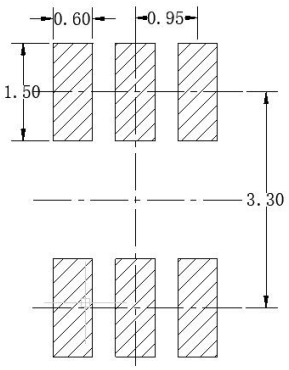

NOTES:

1 Controlling dimension: mm

2 Lead thickness after solder plating will be 0.254mm maximum

3 XX: Date Code, Refer to DC table

4 PINOUT (See Top View :)

PIN1	VDD	PIN4	-
PIN2	-	PIN5	GND
PIN3	OUT	PIN6	-